A

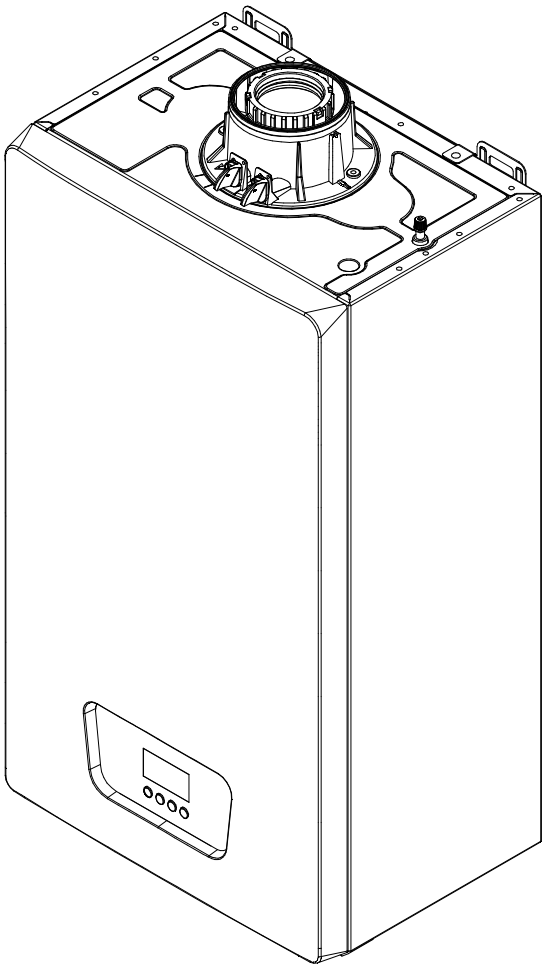

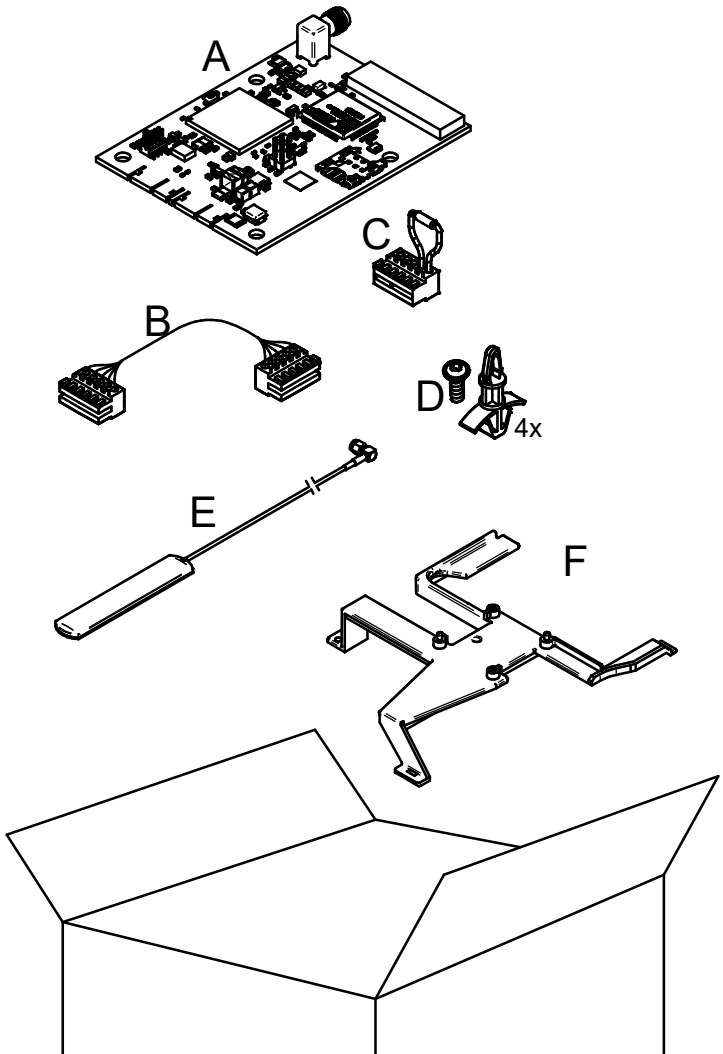

1

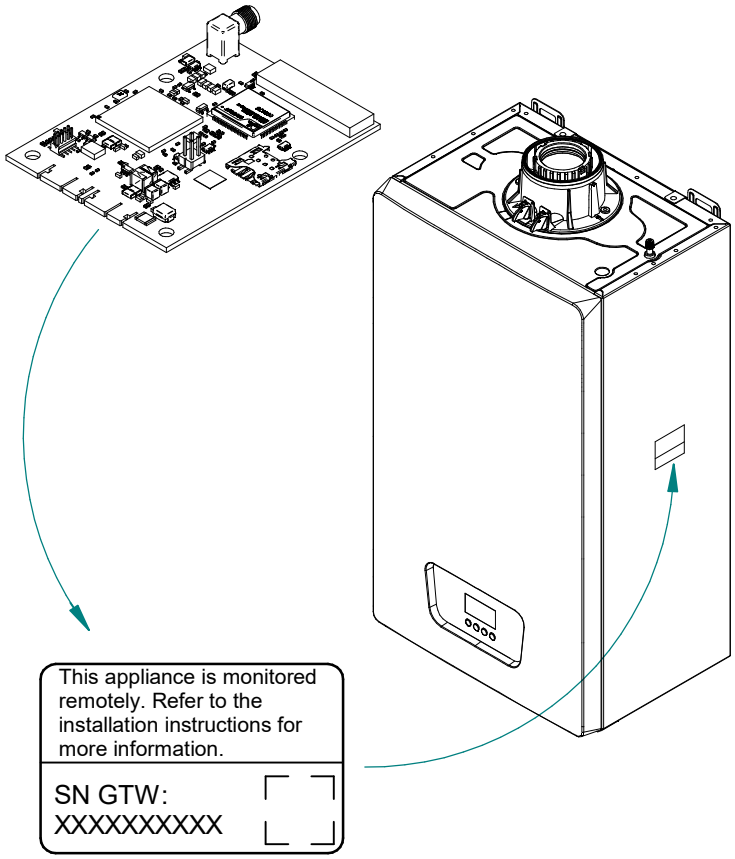
This appliance is monitored remotely. Refer to the installation instructions for more information.
SN GTW:
XXXXXXXXXX

2

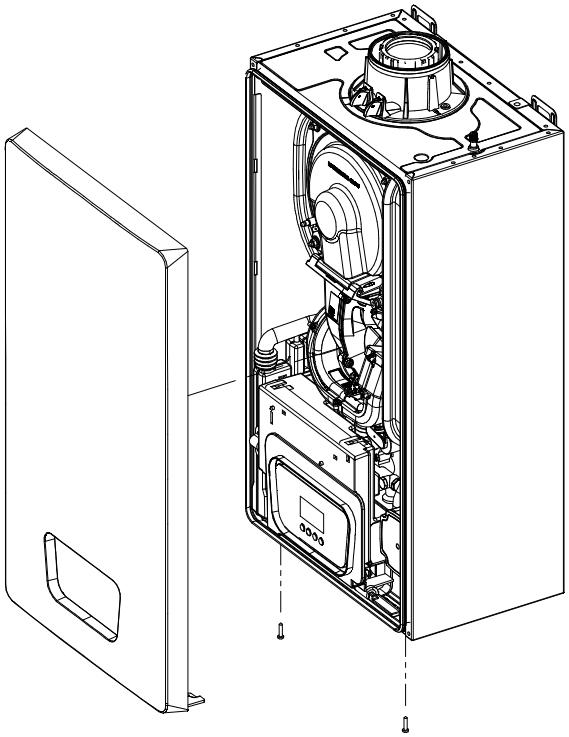

3

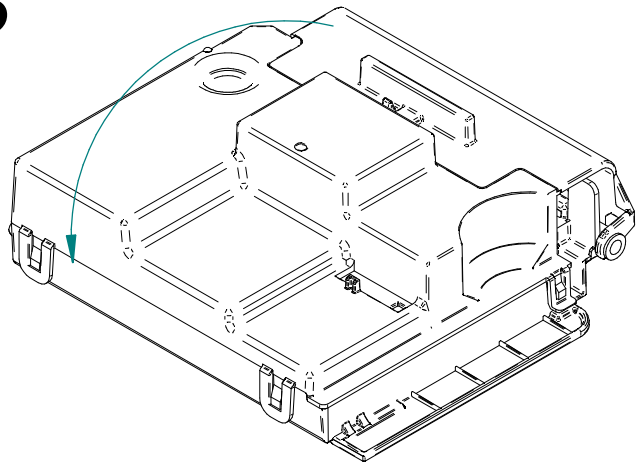

4

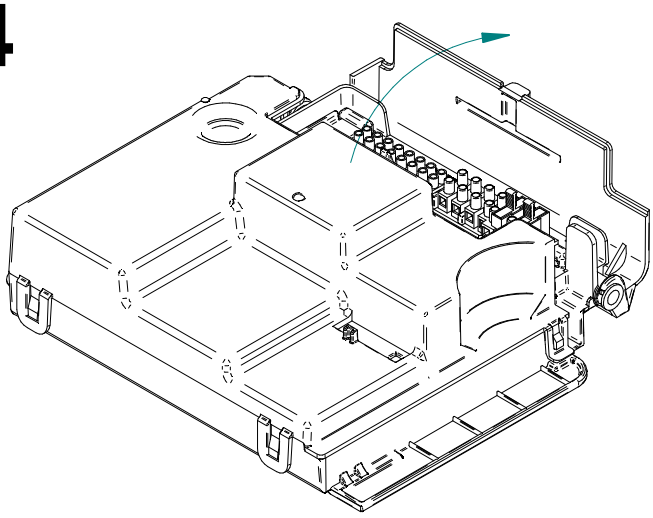

5

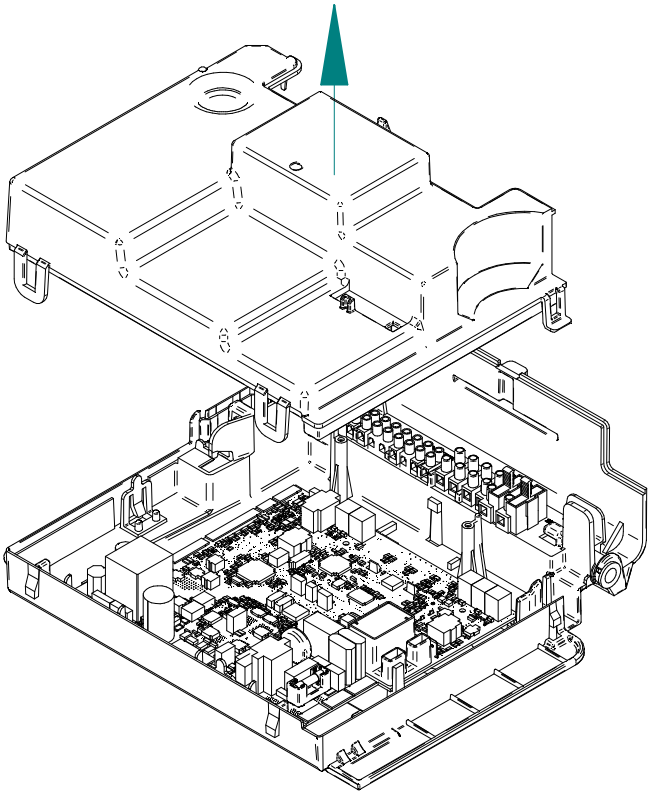

6

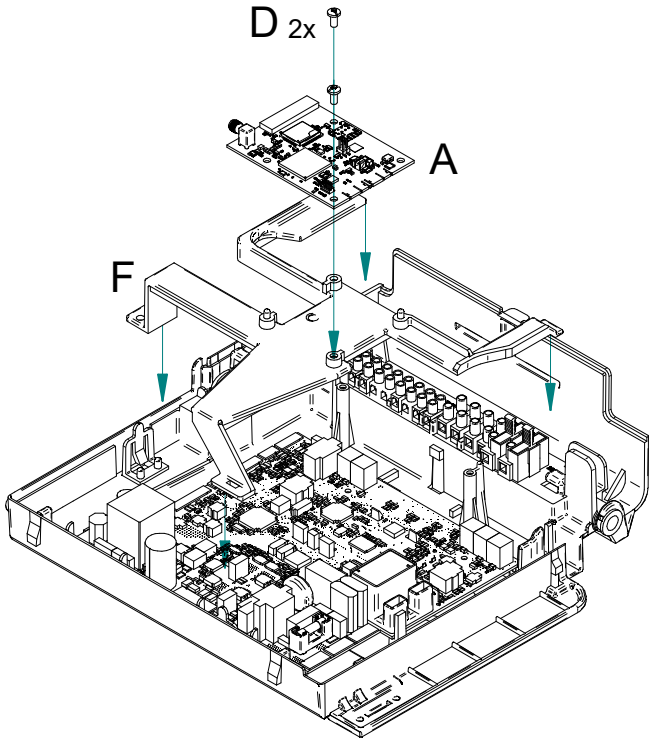

7

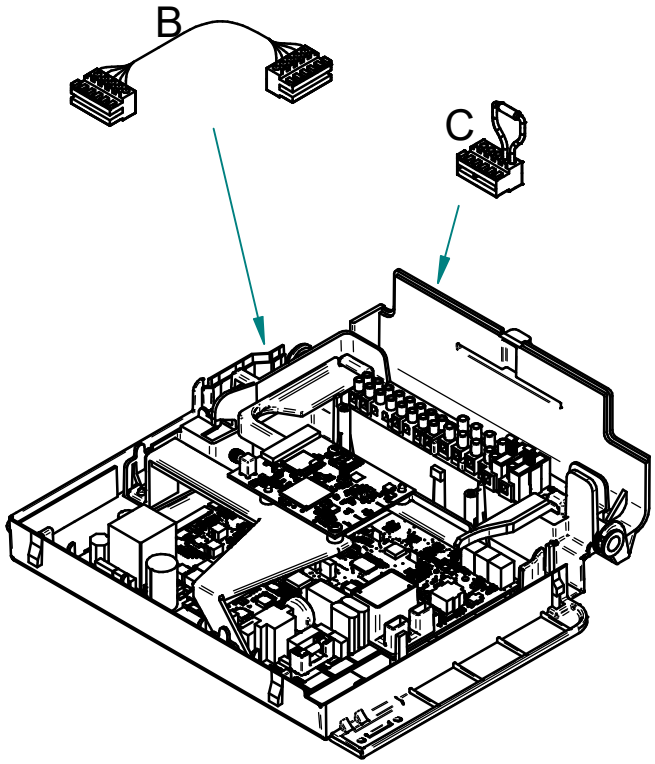

8

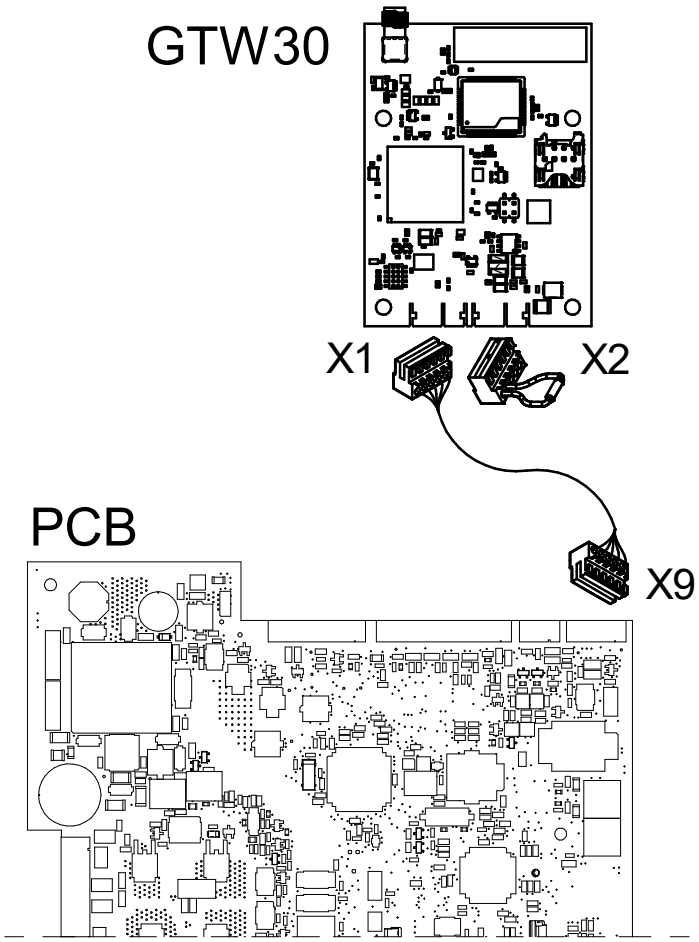

9

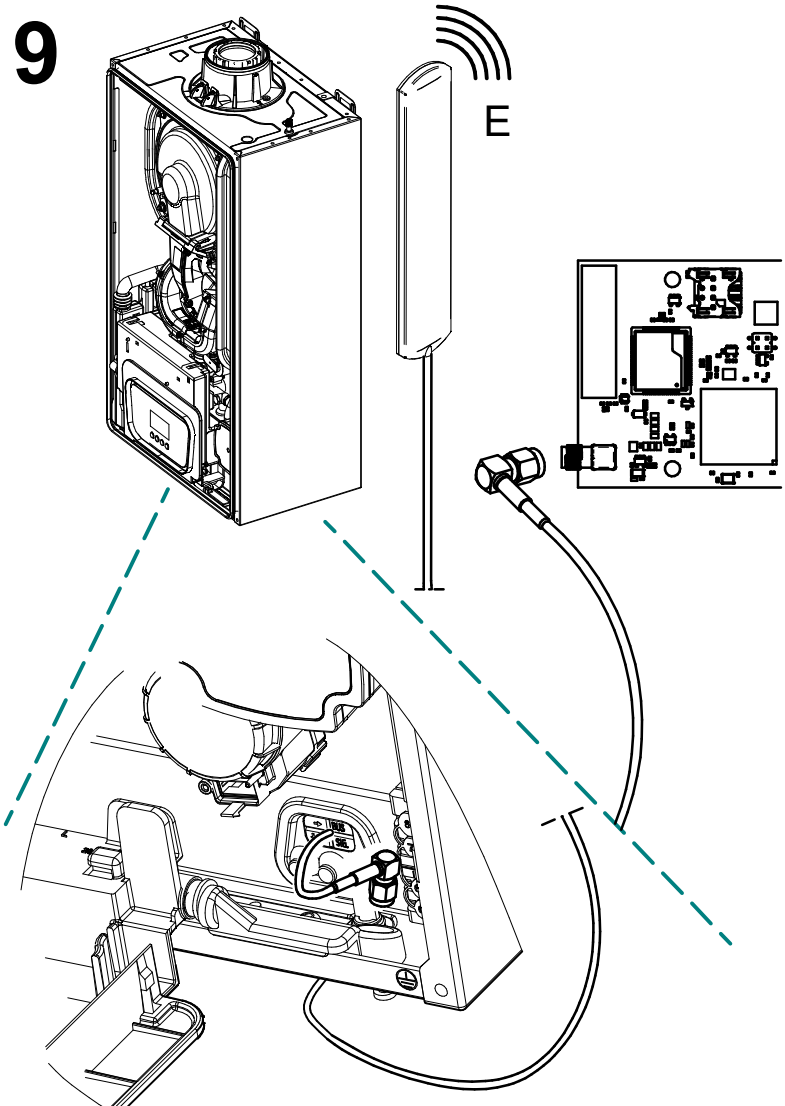

10

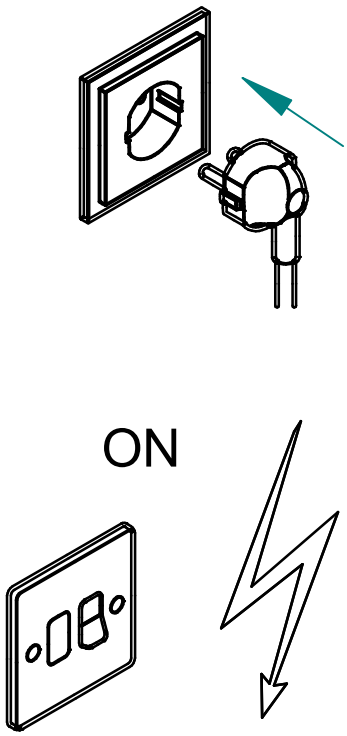

11

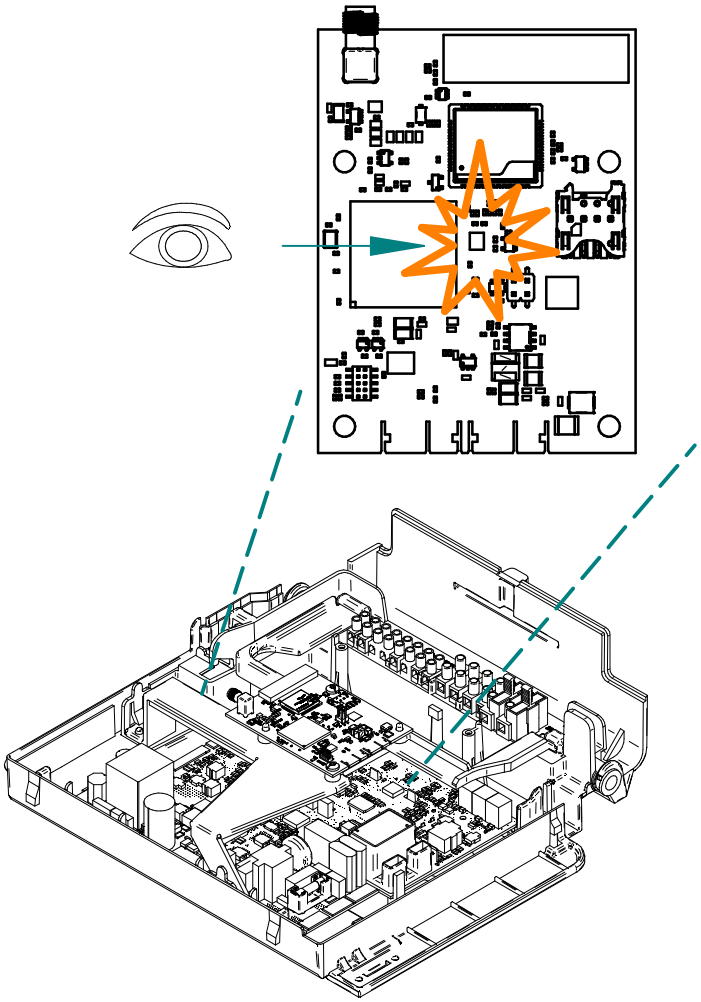

12

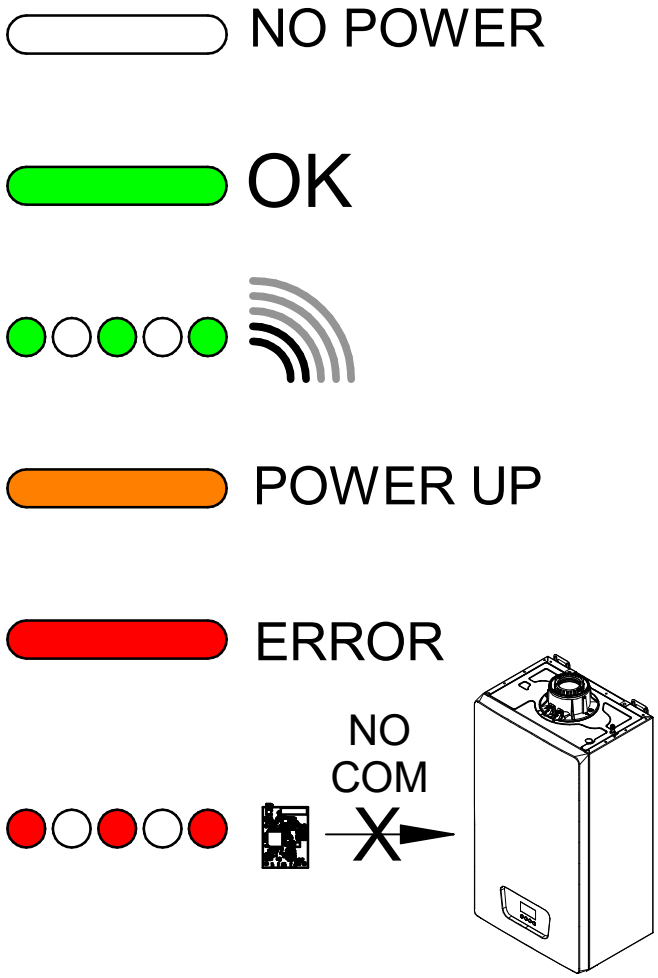

13

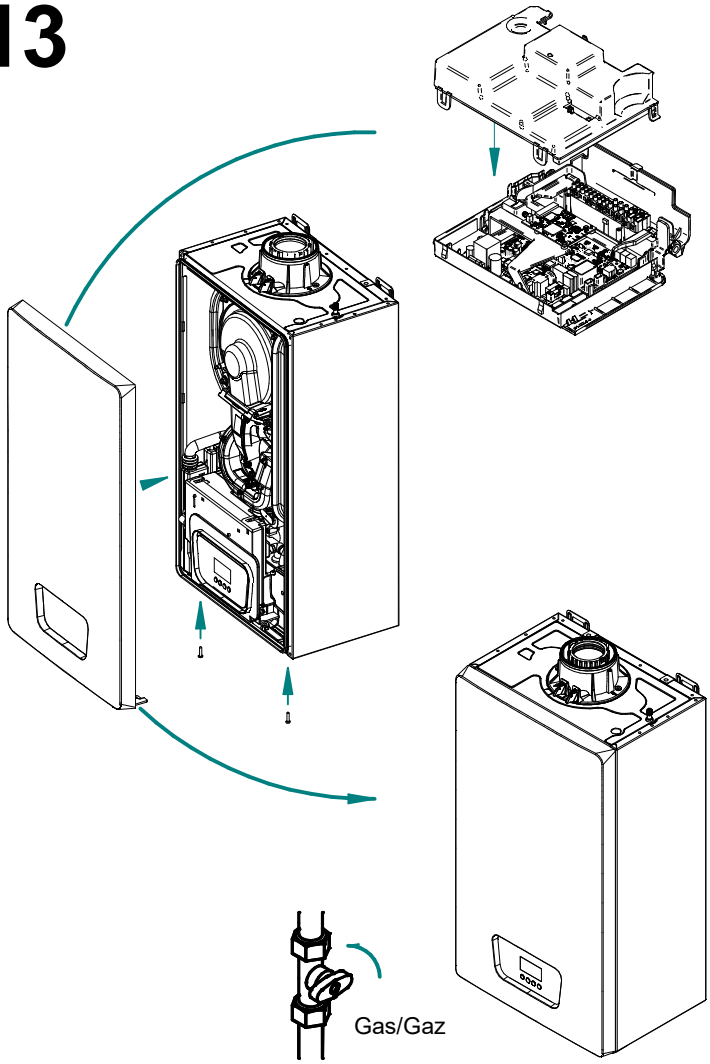

B

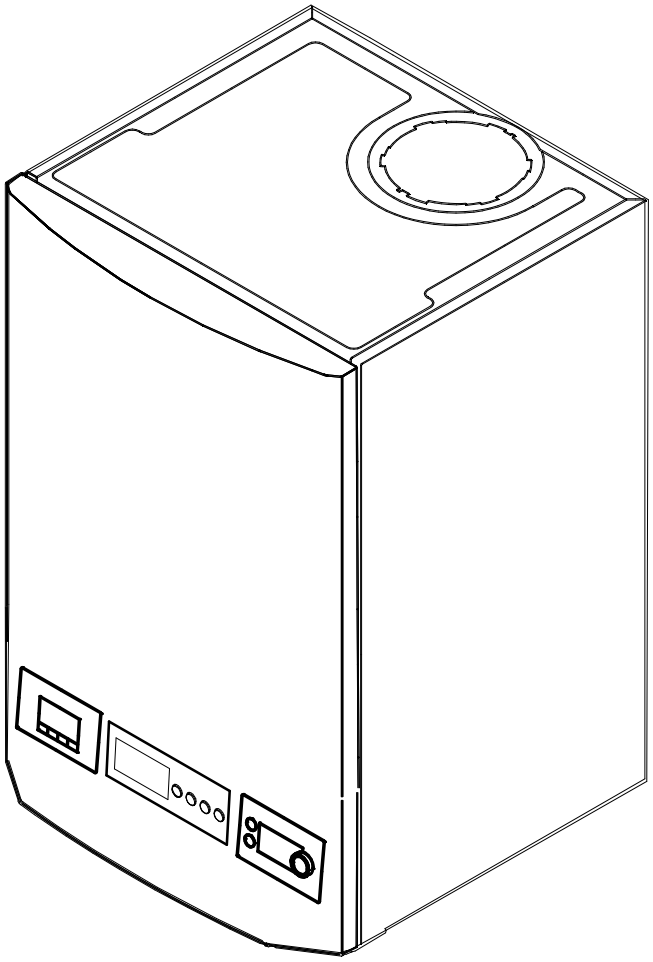

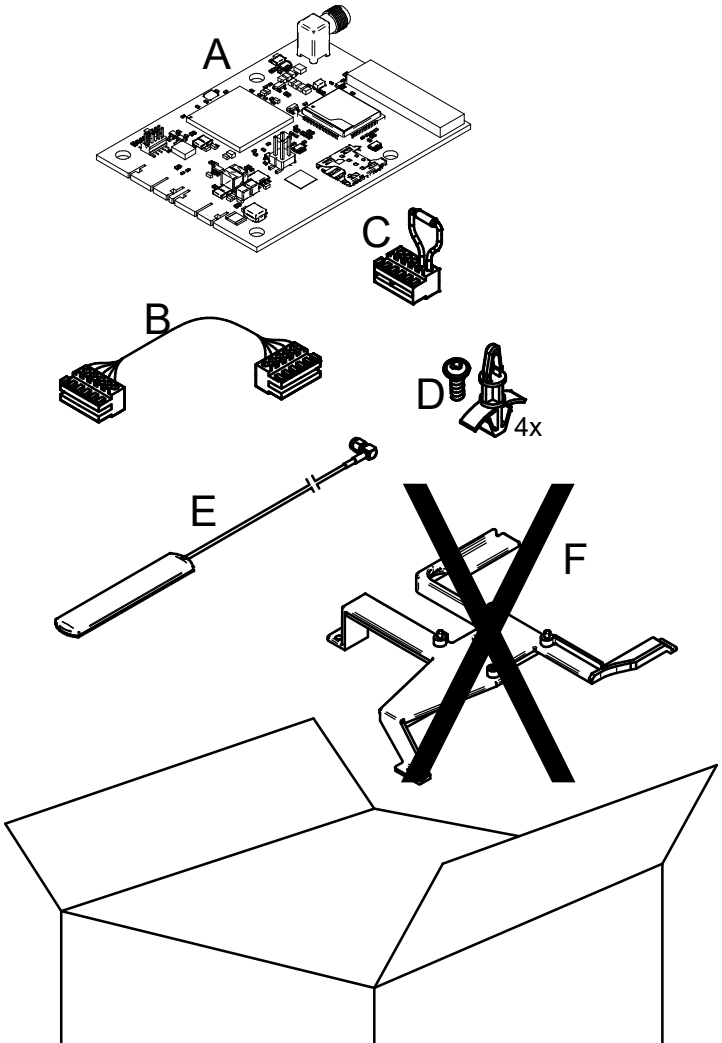

1

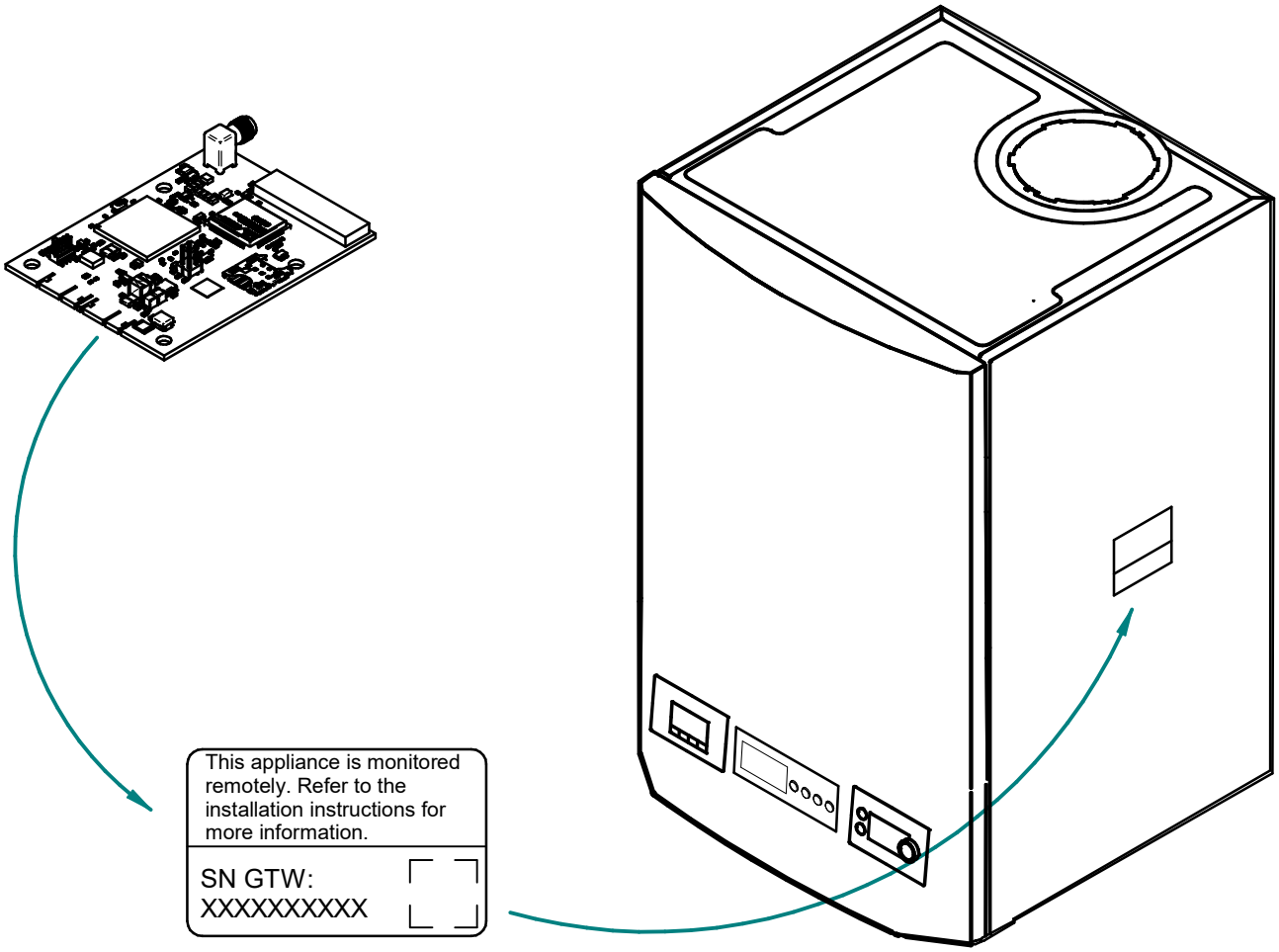
This appliance is monitored remotely. Refer to the installation instructions for more information.
SN GTW:
XXXXXXXXXX

2

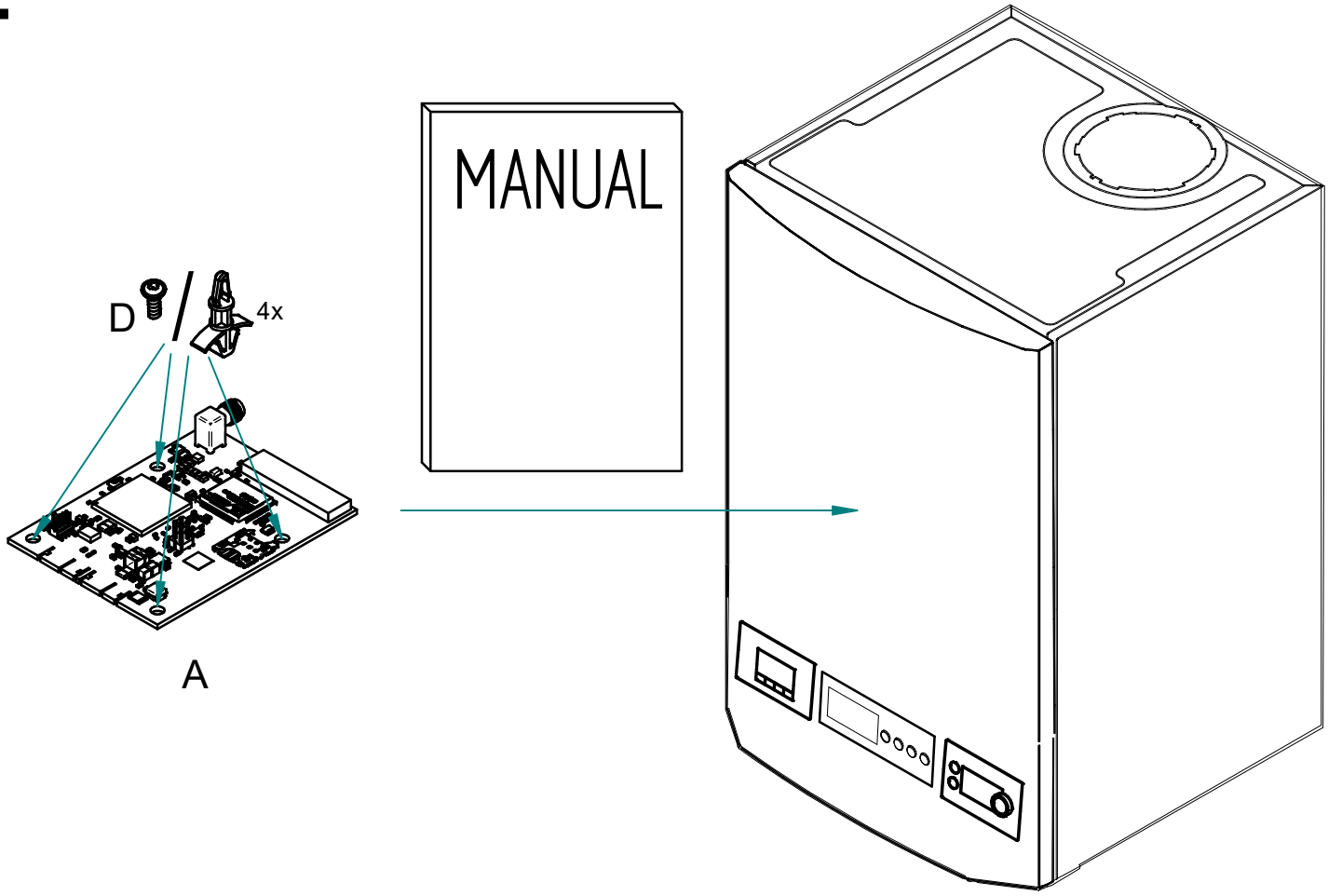
D
4x
A
MANUAL

3

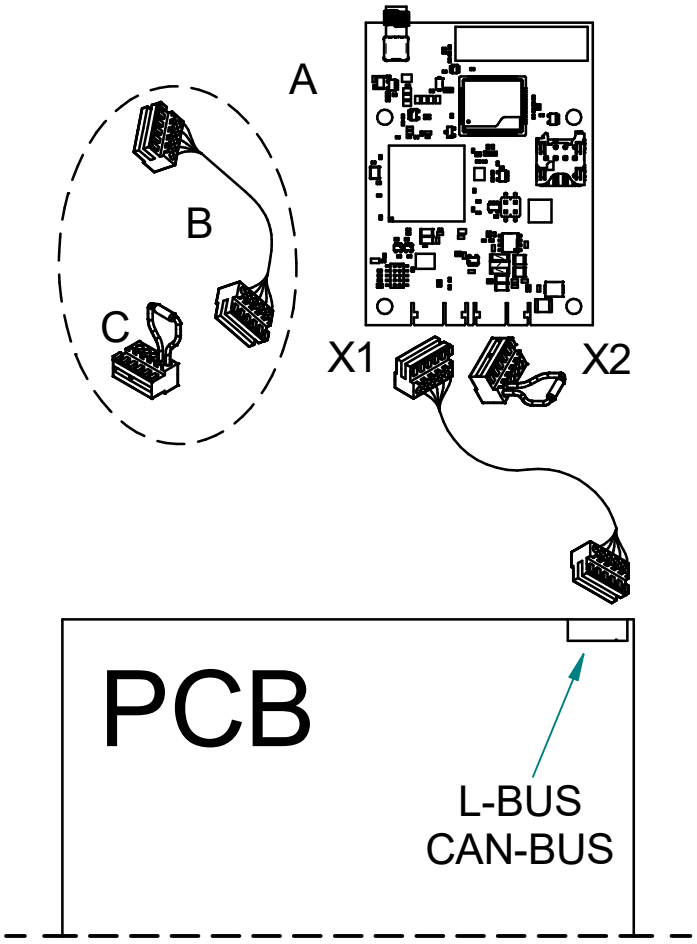
GTW30
A
B
C
X1
X2
PCB
L-BUS
CAN-BUS

4

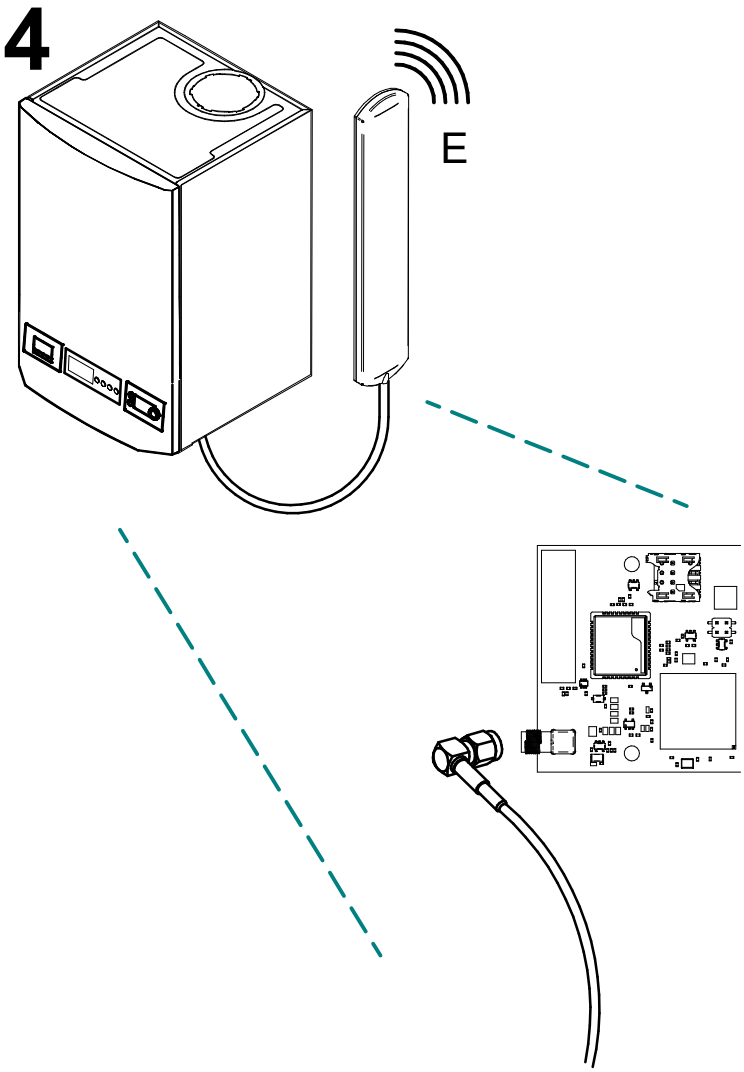
E

5

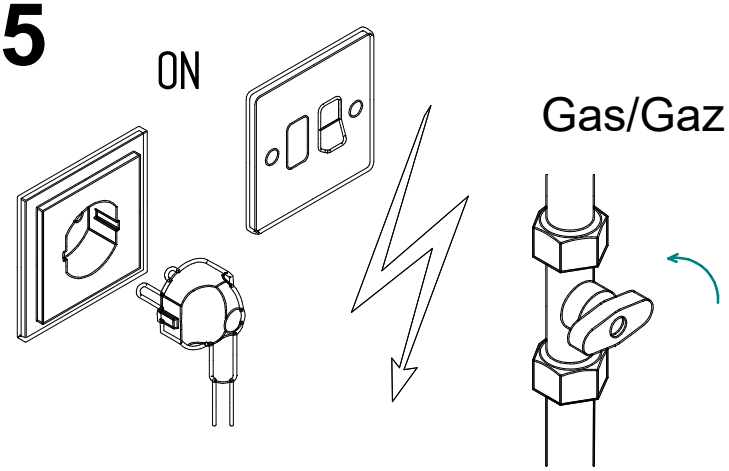
ON
Gas/Gaz

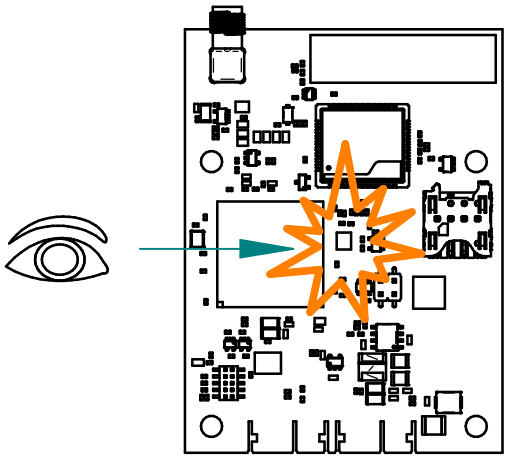

6

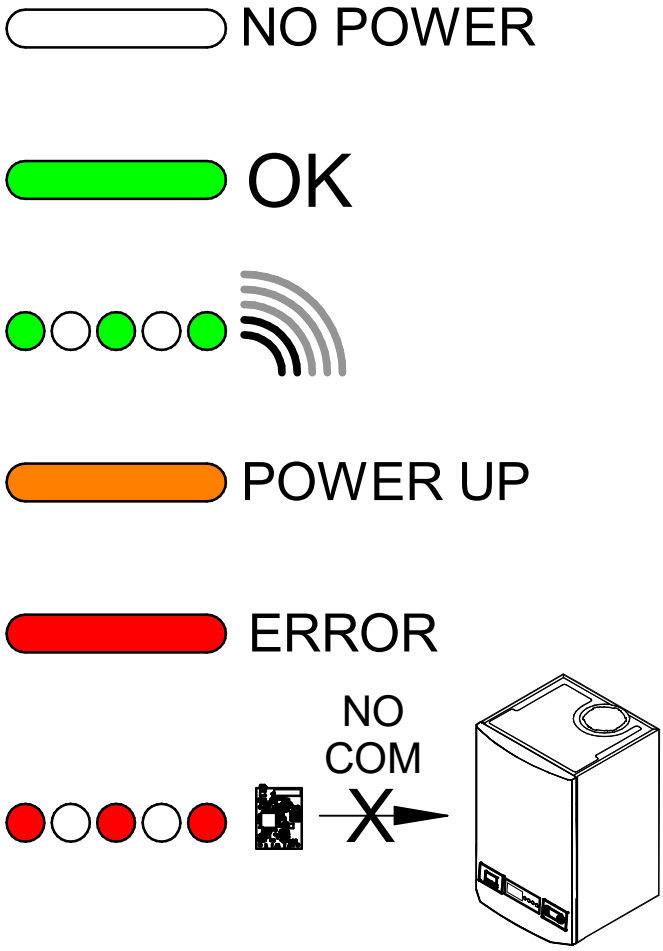
NO POWER
OK
POWER UP
ERROR
NO
COM